Radiation Testing of IEEE1394 FireWire

S. Buchner, C. Seidleck, H. Kim, P. Marshall and K. LaBel

Radiation Effects and Analysis Group NASA/GSFC

•NASA Electronic Parts and Packaging (NEPP) Program's Electronic Radiation Characterization (ERC) Project

• DTRA RHM

Outline of Talk

- Introduction
- Description of the IEEE1394
- Radiation testing performed
- Results observed
- Implications

Introduction

- Separate components on satellites that need to communicate with one another over moderate distances can use:
  - serial bus
  - parallel bus

- IEEE 1394 is a universal non-proprietary standard that describes software and hardware needed for a digital serial bus and is based on Apple Computer's original FireWire.

Features of IEEE 1394 Serial Bus

- Specifications for ***backplane*** and ***cable***
  - Cable contains 6 wires with maximum length of 4.5 meters.
  - Cable minimizes wire harness, provides power, reduces cross talk.
- More than one node can access the bus at a time.
- Inexpensive, available, reliable - COTS.
- Scaleable 100, 200, 400 MHz (800, 1600 and 3200 MHz).
- Two modes - Isochronous and Asynchronous.
- 256 Terabytes of addressable memory-mapped space (48 bits per node, 63 nodes per bus segment and 1024 bus segments).
- Plug and play.

Topology of Typical PC-based IEEE1394

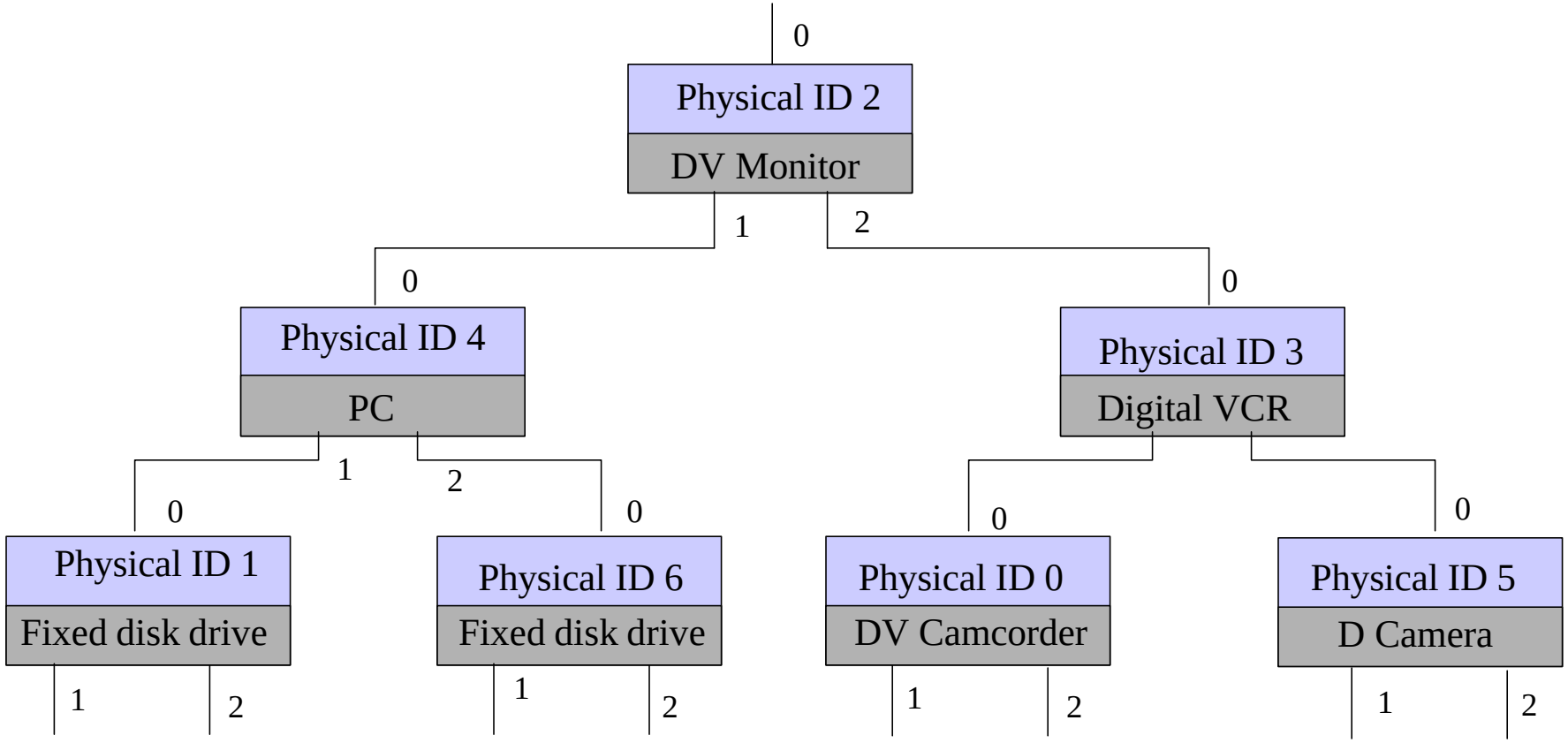

Block Functions of IEEE 1394

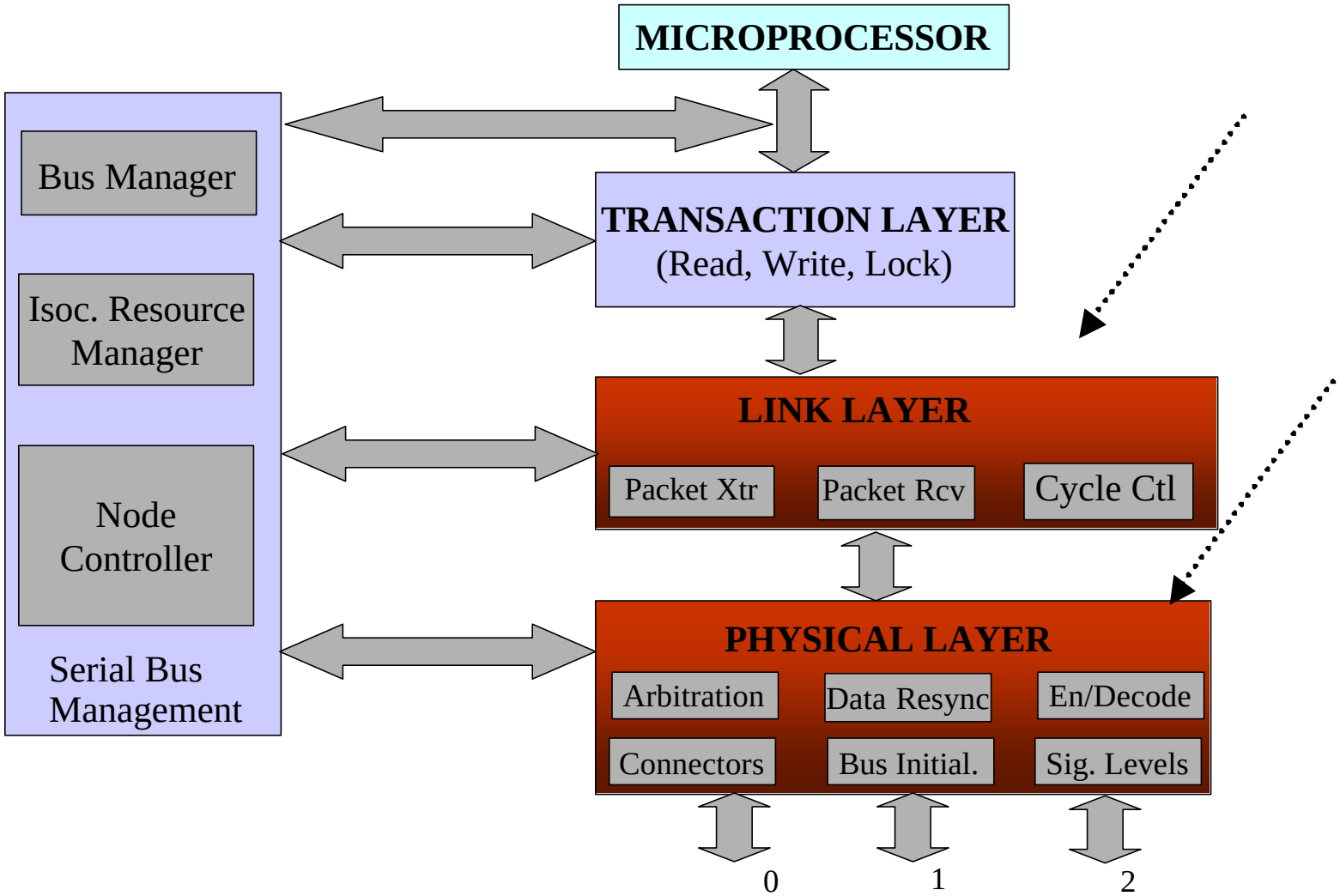

IEEE 1394 Board

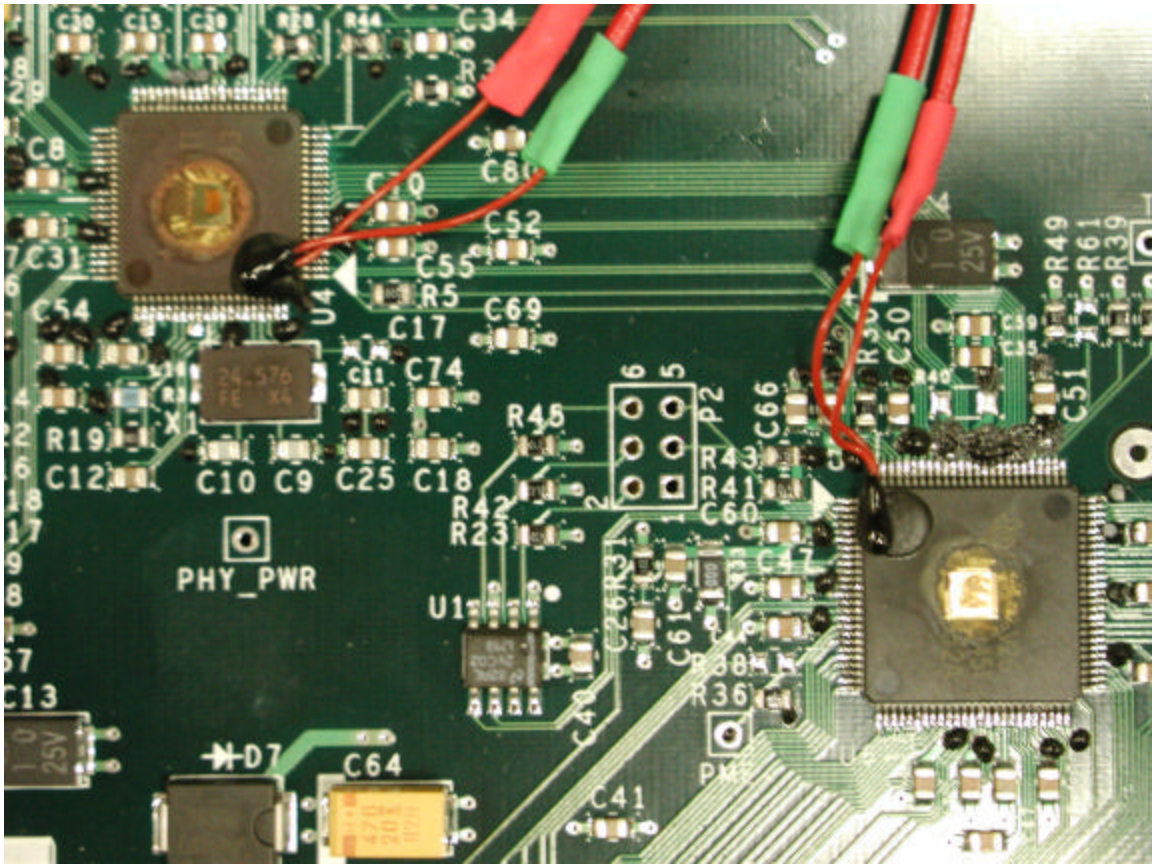

Transmission Modes

- **Isochronous transfers are time-critical and error-tolerant**
  - 1-to-1 or 1-to-many
  - No error correction or retransmission
  - Bandwidth assigned by resource manager
  - 80% of bandwidth devoted to Isochronous transmission
  - Maximum bandwidth determined by how much already assigned

Eg. video or audio streaming

- **Asynchronous transfers are not error-tolerant**
  - Specific node targeted
  - Acknowledged and responded to for error checking and retransmission
  - Not guaranteed bandwidth

Eg. critical data transfer from disk

Primary Asynchronous Packet Format

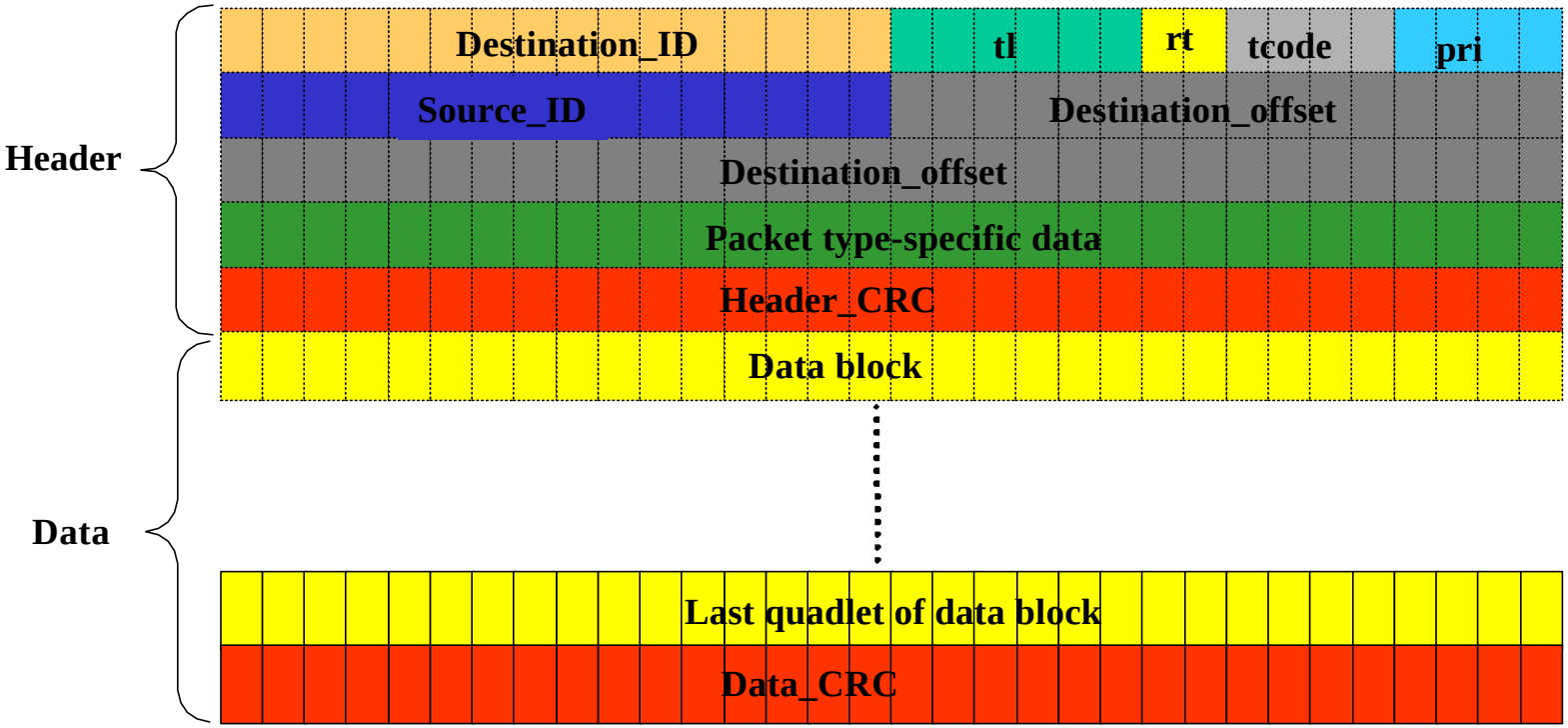

Registers

- LINK Registers
  - 42 out of 102 OHCI registers were monitored
  - 21 out of 22 PCI registers were monitored

- PHY Registers
  - None of the 16 registers in the PHY were monitored

Radiation Characterization

- Protons and heavy ions used to test parts from Texas Instruments and National Semiconductor.
- Irradiate PHY and LINK chips separately on DUT board.
- National Semiconductor part underwent destructive when irradiated with ions having a LET = 27 MeV.cm^2/mg. Therefore, did a full characterization on the TI parts only.

Radiation Test Setup

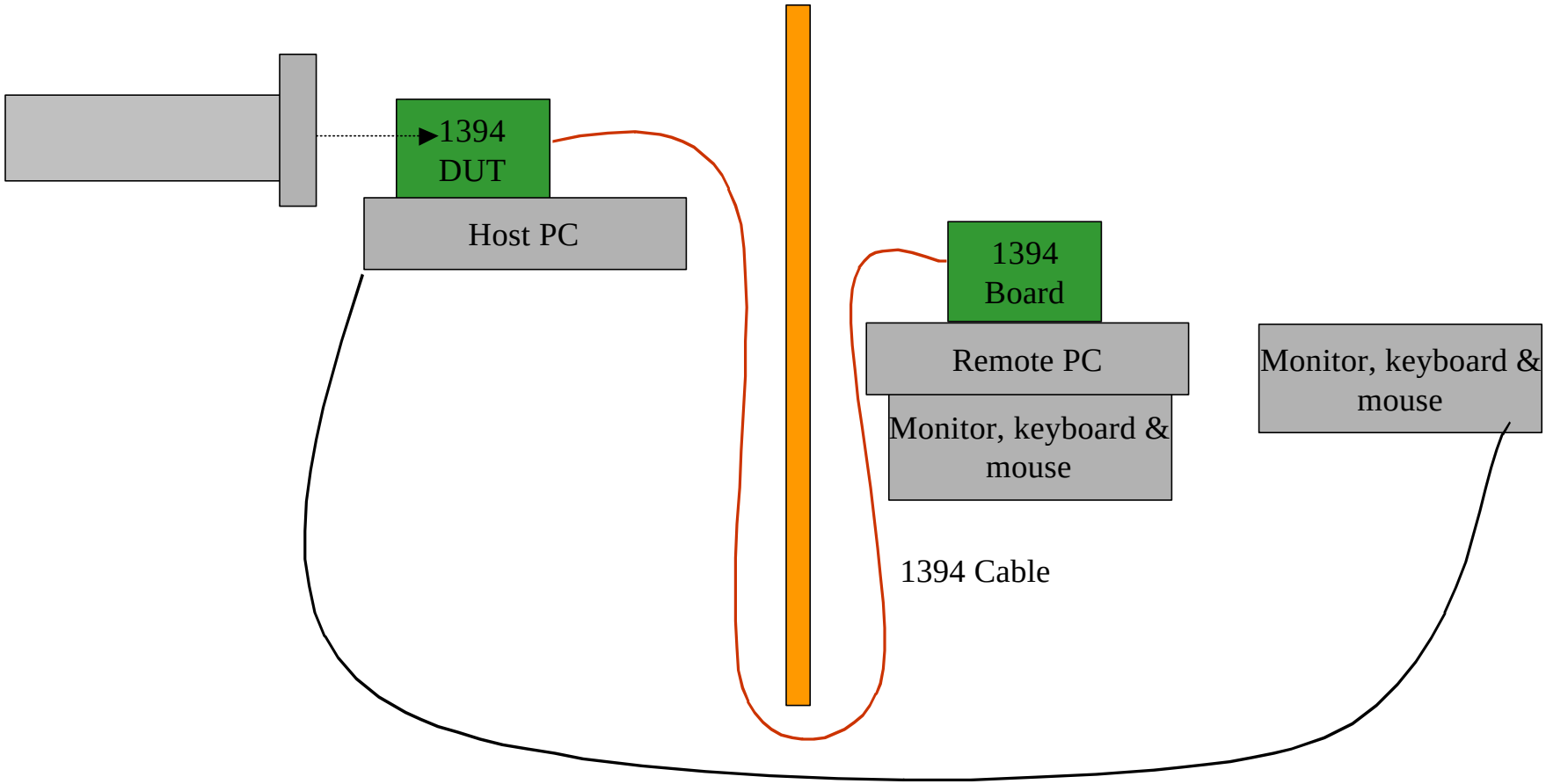

Asynchronous Mode

Setup
- Lockdown memory
- Set node ID
- Enable receive contexts ARxRQ, ARRS
- Set delay
- Turn on interrupts

Setup
- Lockdown memory
- Set node ID
- Enable receive contexts ARxRQ, ARRS
- Set delay
- Turn on interrupts

CTRLR

DUT

Asynchronous Mode

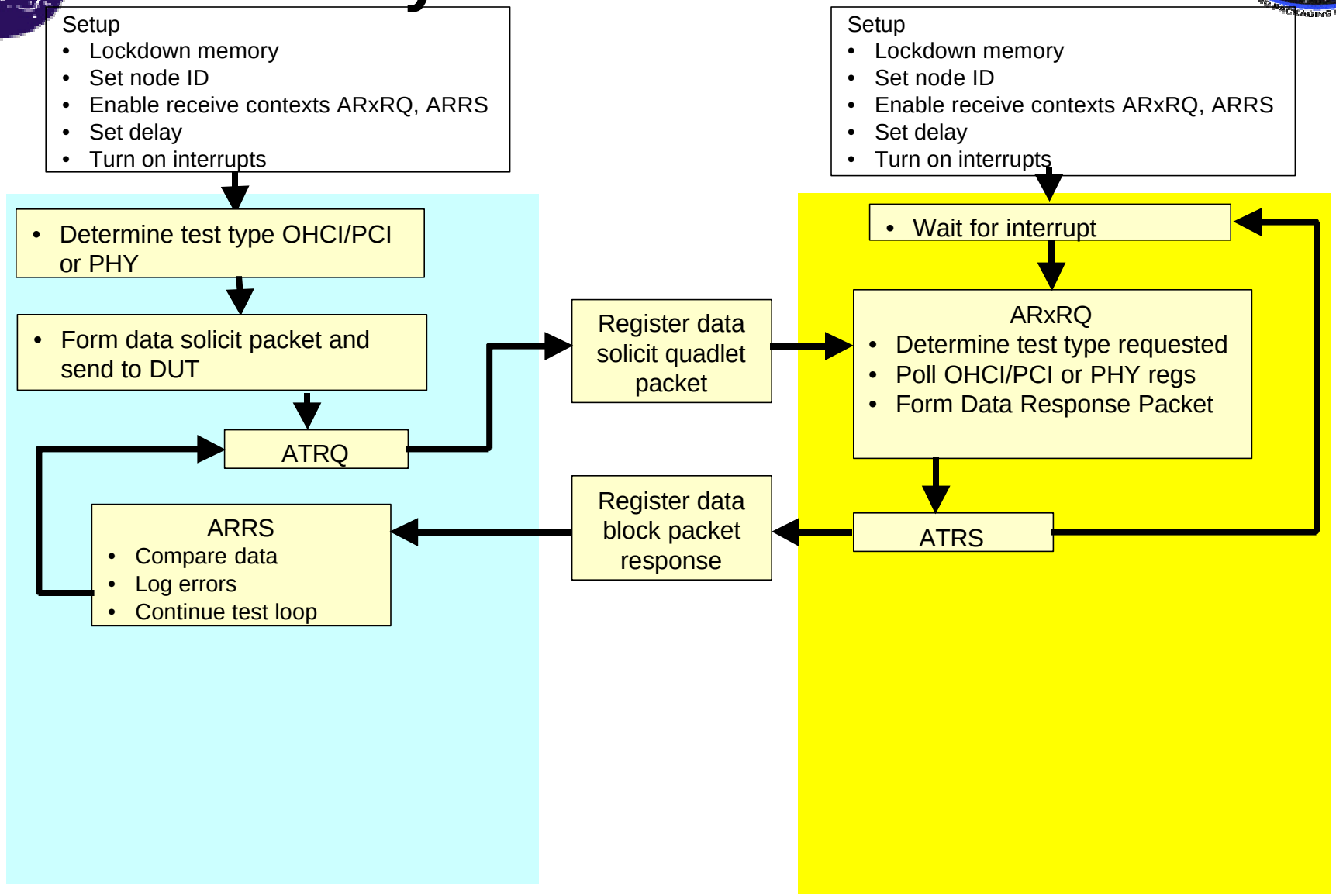

CTRLR

DUT

Asynchronous Mode

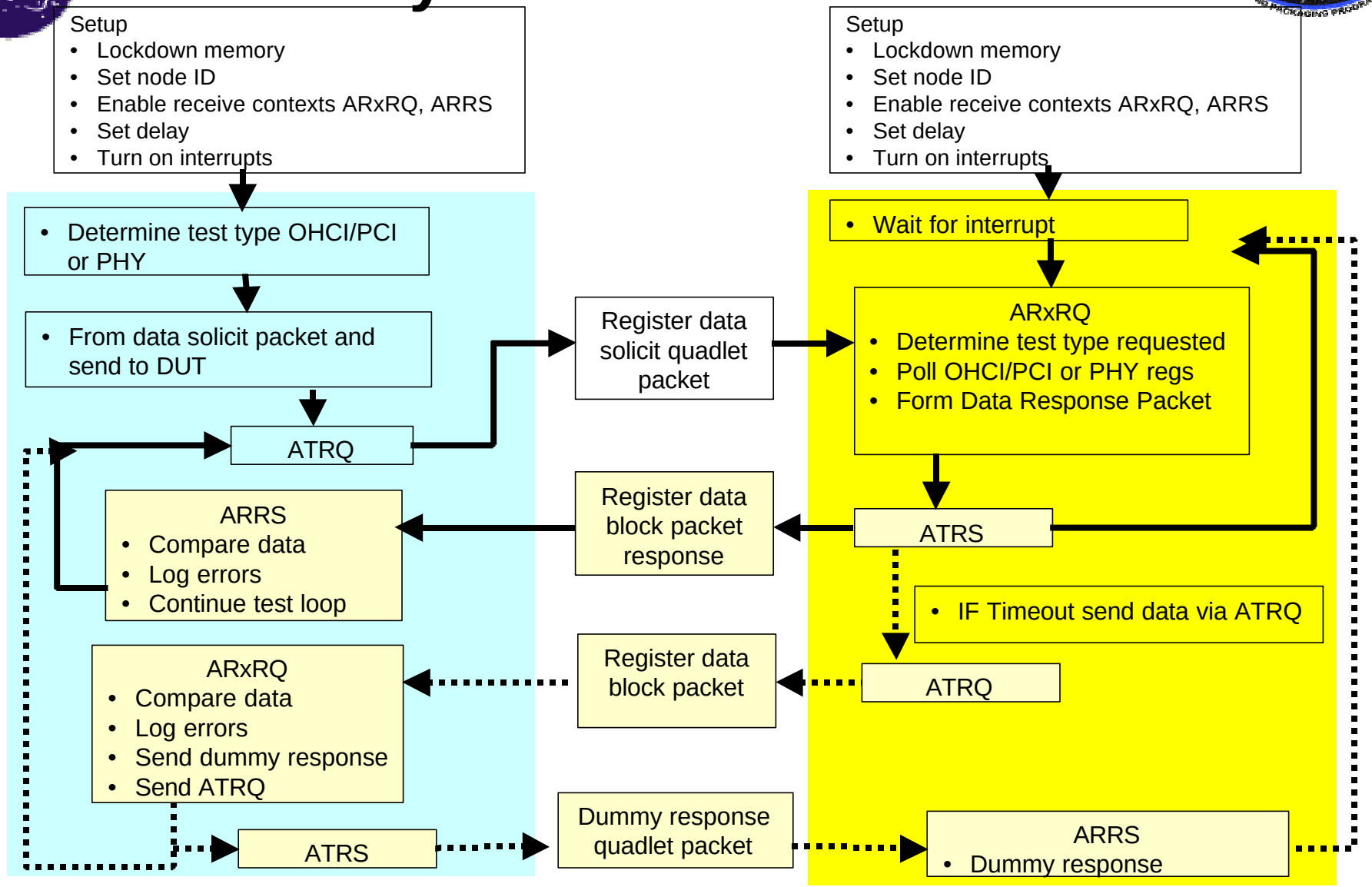

CTRLR

DUT

Isochronous Mode

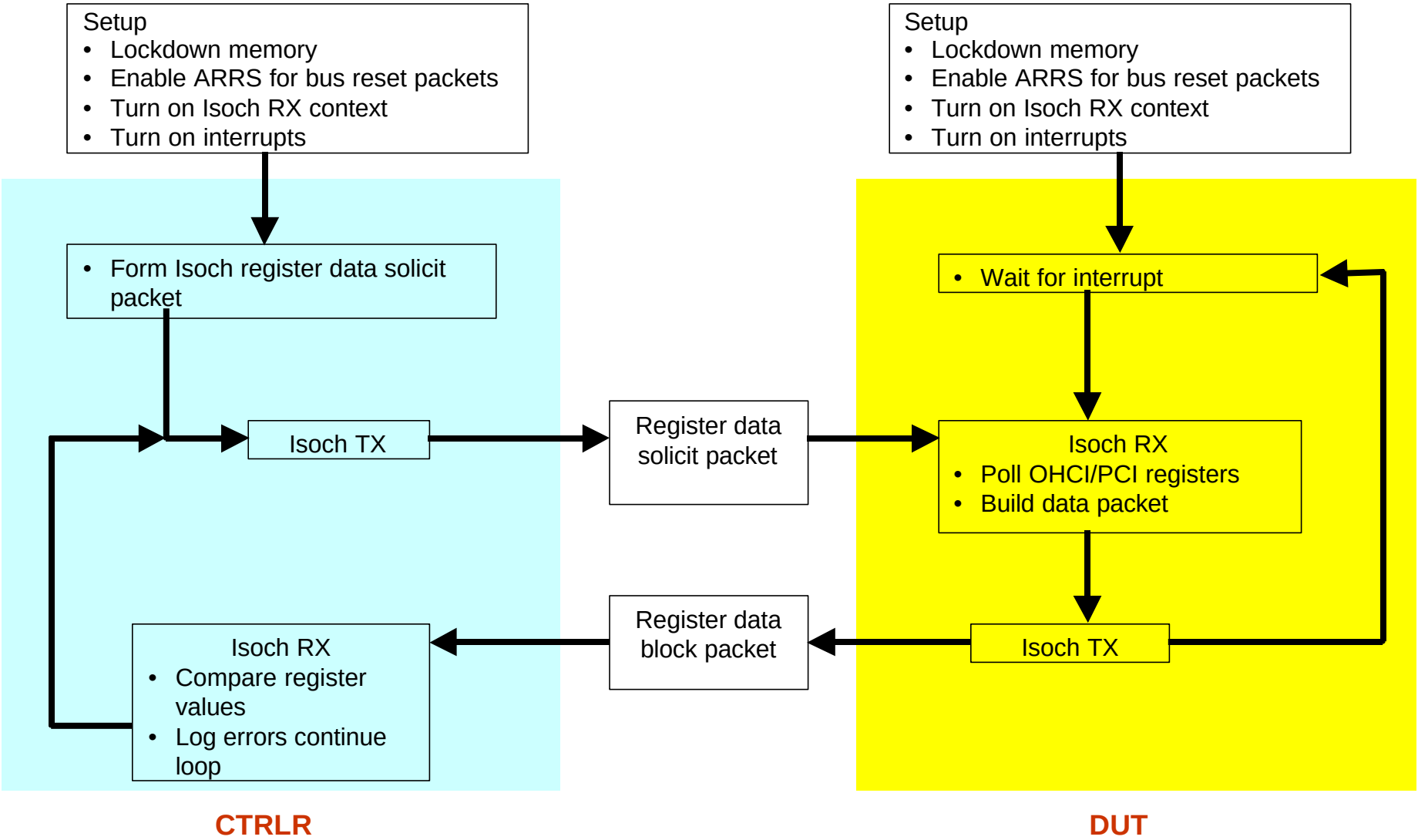

Testing Approach - Error Categorization

Step	Action
1	SEU test loop is restarted on the controller i.e. a packet is sent to DUT requesting register information
2	Software bus reset. Force root (R bit), set IBR (initiate bus reset) in the PHY, Reset node on the LLC (HCCC register, set bit 16 –Soft Reset) This restores OHCI registers and flushed FIFOs. Set bus Ops, IRMC, CMC, ISC, configuration ROM, Enable Rx (receive) and Tx(transmit).
3	Reload Software application. This refreshes the lockdown memory region shared between the software and hardware.
4	Step 2 followed by step 3.
5	Able to verify that the controller is sending register data solicit packets to the DUT. Able to verify that the DUT receives the register data solicit packet. Able to verify that the DUT sends register data packet response to the controller. Able to verify that the controller cannot see the register data response packet. Power cycle the controller.
6	Disconnect/reconnect the 1394 cable. Causes hard bus reset, tree ID process.
7	Step 6 followed by steps 3, 2, and 1.
8	Step 6 followed by cold rebooting DUT followed by steps 3, 2, and 1.
9	Cold reboot DUT followed by steps 3, 2 and 1.
10	Step 6 followed by step 9
11	Reboot controller, followed by steps 3, 2 and 1.
12	Reboot both controller and DUT PCs, followed by steps 3, 2 and 1.

Results - LINK Running Asynchronous Mode

	ERRORS IN *LLC* RUNNING *ASYNCHRONOUS* MODE	3	4.2	8.39	11.9	27.7	39.2	51.6	59.6	73
	"Soft" Errors									
1	No errors observed but curent jumped from 18mA->44mA	0	0	0	0	0	0	0	0	x
2	Register error, self-corrected and no change in current	1.3E-04	1.0E-05	4.6E-05	2.5E-05	8.8E-05	3.1E-04	2.4E-04	1.3E-04	x
3	Register error, self-corrected, current jumped 18mA->44mA	0	0	0	0	0	0	0	0	x
	"Hard" Errors									
4	Restart communications from Controller.	0	0	0	8.3E-07	0	0	6.8E-06	0	x
5	Software bus reset current jumped from 18mA to 44mA.	0	0	0	0	0	2.6E-05	0	0	x
6	Reset Controller and/or DUT software	0	0	4.3E-06	8.3E-07	2.3E-06	0	0	0	x
7	Software bus reset and reset software on DUT and controller	0	0	4.3E-06	4.2E-06	0	1.3E-05	0	0	x
8	Controller sends packet, does not listen Cold reboot controller	0	0	0	0	2.3E-06	0	0	0	x
9	Disconnect/reconnect cable (Hard bus reset).	0	0	0	0	0	0	0	0	x
10	Disconnect/reconnect cable, reload bus and DUT software.	0	0	0	0	0	0	6.8E-06	0	x
11	Reset cable and then cold reboot DUT	0	0	0	0	2.3E-06	0	0	5.7E-05	x
12	Cold reboot DUT after lockup, but no change in current	0	0	0	8.3E-07	4.5E-06	2.6E-05	1.4E-05	0	x
13	Cold reboot DUT after lockup, current jump 18mA to 44mA	0	0	2.2E-06	1.7E-06	4.5E-06	0	1.4E-05	0	x
14	Discont/recon cable, reboot DUT and software delta I =0	0	0	0	0	0	0	0	0	x
15	Discon/recon cable, reboot DUT & software I: 18 -> 44 mA	0	0	0	0	0	0	0	0	x
16	Reboot controller, reset software on bus, controller and DUT	0	0	0	0	0	0	0	0	x
17	Reboot both computers, reset all software	0	0	4.3E-06	0	0	0	6.8E-06	0	x

Results - PHY Running Asynchronous Mode

	ERRORS IN *PHY* RUNNING *ASYNCHRONOUS* MODE	3	4.2	8.39	11.9	27.7	39.2	51.6	59.6	73
	"Soft" Errors									
1	No errors observed but curent jumped from 18mA->44mA	0	0	x	0	0	0	0	x	x
2	Register error, self-corrected and no change in current	0	0	x	0	0	0	0	x	x
3	Register error, self-corrected, current jumped 18mA->44mA	0	0	x	0	0	0	0	x	x
	"Hard" Errors									
4	Restart communications from Controller.	0	0	x	0	0	0	0	x	x
5	Software bus reset current jumped from 18mA to 44mA.	0	0	x	0	0	1.0E-04	6.4E-05	x	x
6	Reset Controller and/or DUT software	0	0	x	0	9.1E-06	0	0	x	x
7	Software bus reset and reset software on DUT and controller	0	0	x	0	0	0	0	x	x
8	Controller sends packet, does not listen Cold reboot controller	0	0	x	0	0	0	0	x	x
9	Disconnect/reconnect cable (Hard bus reset).	9.1E-08	0	x	8.3E-07	0	0	0	x	x
10	Disconnect/reconnect cable, reload bus and DUT software.	0	0	x	3.3E-06	0	0	0	x	x
11	Reset cable and then cold reboot DUT	0	0	x	0	0	0	0	x	x
12	Cold reboot DUT after lockup, but no change in current	0	0	x	0	0	2.0E-04	0	x	x
13	Cold reboot DUT after lockup, current jump 18mA to 44mA	0	0	x	0	0	0	0	x	x
14	Discont/recon cable, reboot DUT and software delta I =0	0	0	x	0	0	0	0	x	x
15	Discon/recon cable, reboot DUT & software I: 18 -> 44 mA	0	0	x	0	0	0	0	x	x
16	Reboot controller, reset software on bus, controller and DUT	0	0	x	0	0	0	0	x	x
17	Reboot both computers, reset all software	0	0	x	2.5E-06	3.6E-05	2.0E-04	2.6E-04	x	x

Results LINK Irradiated

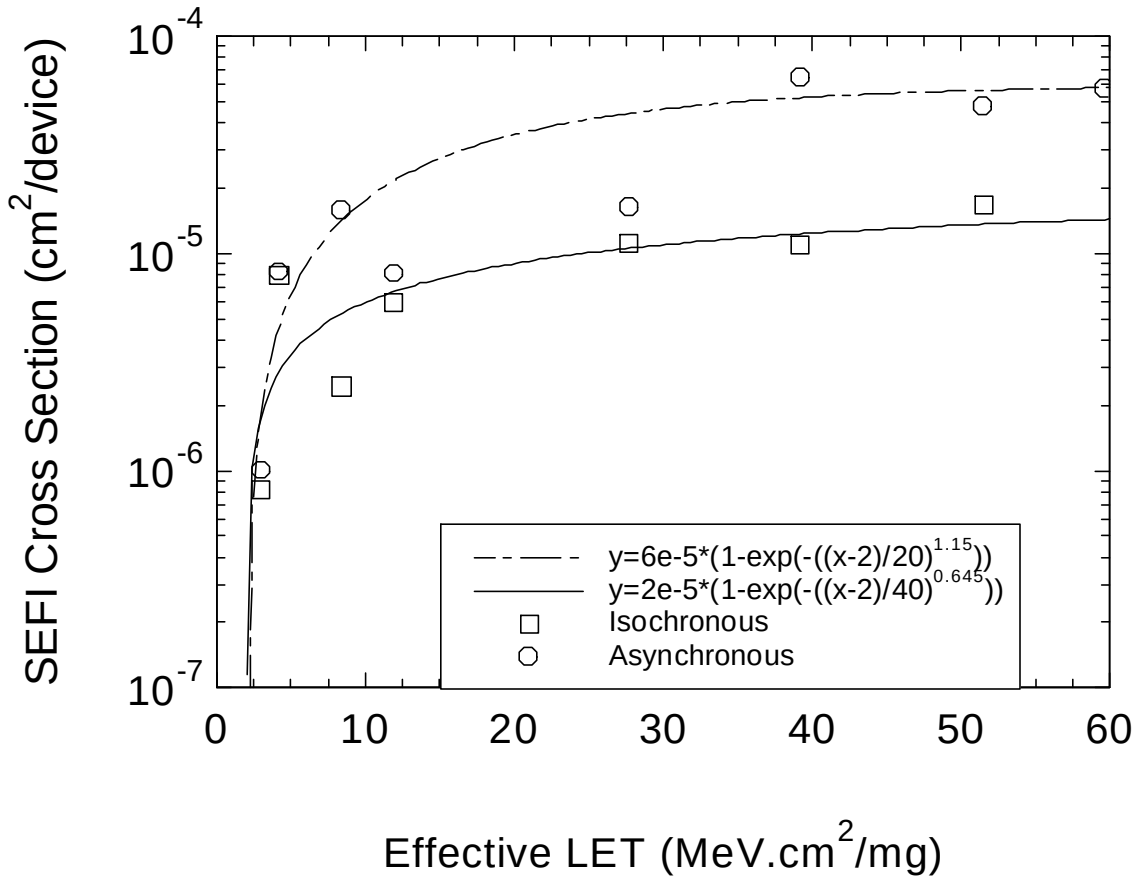

Results - LINK Irradiated

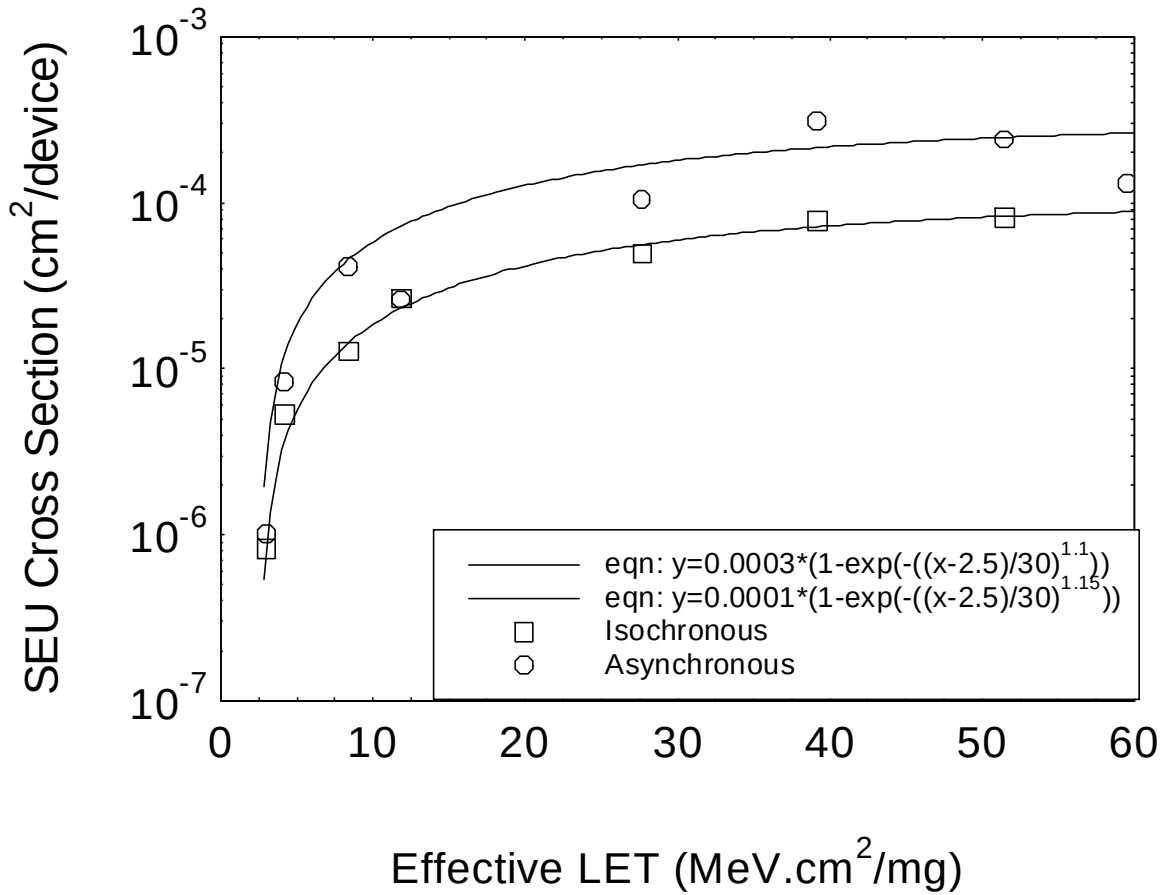

Conclusions

- NS part exhibited destructive latchup at LET=27 MeV.cm^2/mg
- TI part exhibited both SEUs (soft errors) and SEFIs (hard errors)
- At low LETs the errors are mostly soft errors
- The presence of SEFIs resulting in rebooting of the system makes this part problematic for space.
- SEU in the DUT cause a SEFI that requires rebooting the Controller
- An improved test would involve:
  - automatic reboot
  - another device